Curling Club
Bern Inter

Finals

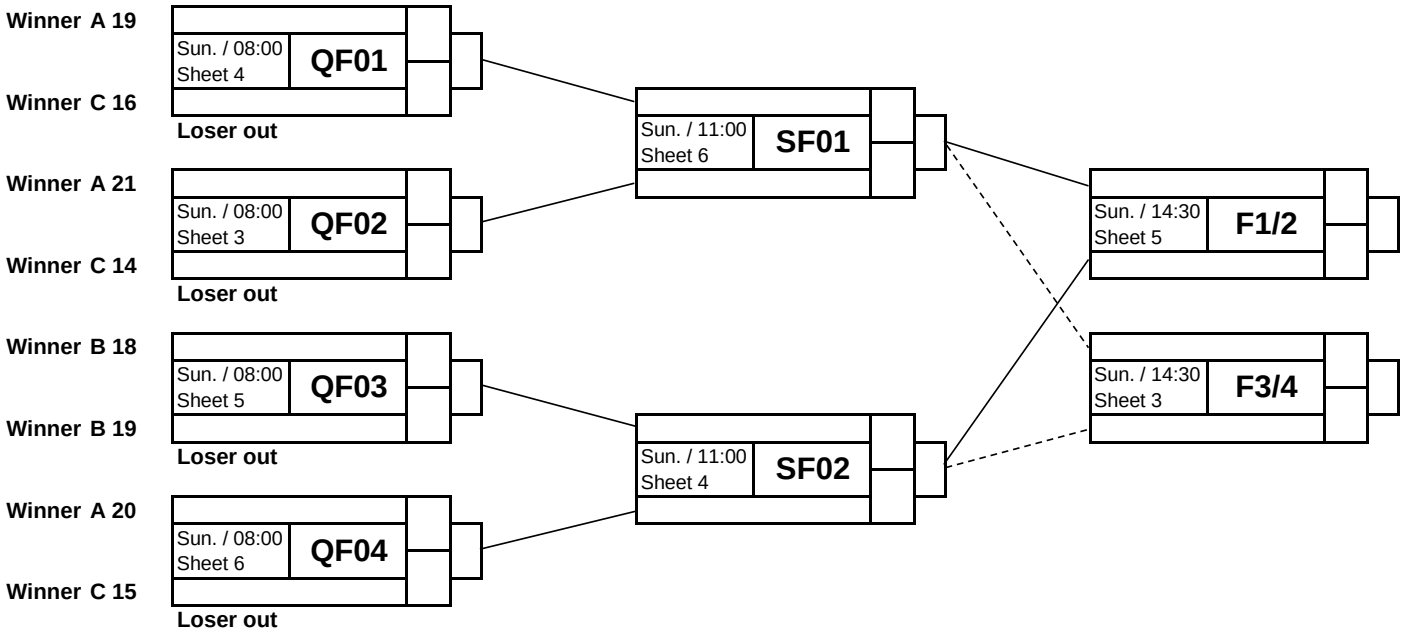

Consolation - Cup

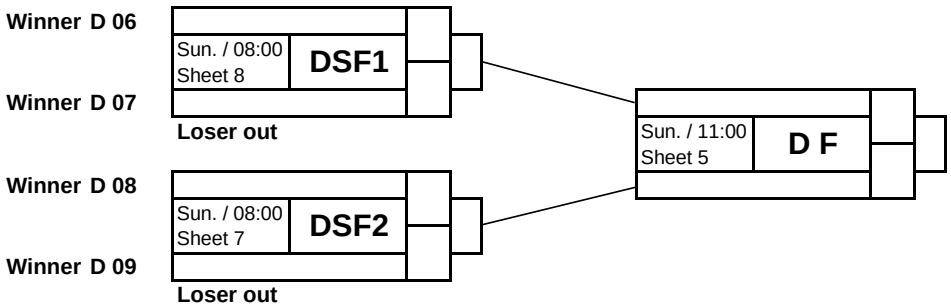

Sheetzuteilungen können, wenn notwendig, geändert werden / Sheets may be changed if necessary

Curling Club Bern Inter

WORLD CURLING TOUR

A Road

BERN ZÄHRINGER Brunner	A 01	Fri. / 08:00 Sheet 1	7
ITALY Ribotta			1
SWEDEN Nymann	A 02	Fri. / 08:00 Sheet 2	9
CZECH REPUBLIC Klima			2
SCHAFFHAUSEN Schnider	A 03	Fri. / 08:00 Sheet 3	11
POLAND Stych			2
SCOTLAND Bryce	A 04	Fri. / 08:00 Sheet 4	6
AUSTRIA Genner			4
GLARUS Hösli	A 05	Fri. / 08:00 Sheet 5	8
USA Märki			6
GERMANY Totzek	A 06	Fri. / 08:00 Sheet 6	5
ITALY Colli			6
SCOTLAND Craik	A 07	Fri. / 08:00 Sheet 7	3
SOLOTHURN REGIO Iseli			5
NETHERLANDS Gösgens	A 08	Fri. / 08:00 Sheet 8	12
BASEL Jermann			2

BERN ZÄHRINGER Brunner	A 13	Fri. / 16:00 Sheet 7	B 01 / B 01
SWEDEN Nymann			
SCHAFFHAUSEN Schnider	A 14	Fri. / 16:00 Sheet 6	B 02 / B 02
SCOTLAND Bryce			
GLARUS Hösli	A 15	Fri. / 16:00 Sheet 8	B 03 / B 03
ITALY Colli			
SOLOTHURN REGIO Iseli	A 16	Fri. / 16:00 Sheet 3	B 04 / B 04
NETHERLANDS Gösgens			

A 19	Sat. / 07:30 Sheet 5	B 12 / B 11	Winner to QF01 Loser to B 17
A 20	Sat. / 07:30 Sheet 2	B 13 / B 09	Winner to QF04 Loser to B 15

SKIN	Sat. / 14:15 Sheet 7	0 / 0	Challenge Skins Game

ZUG Stocker	A 09	Fri. / 12:00 Sheet 5	B 05
LATVIA Truksans			
SCOTLAND Waddell	A 10	Fri. / 12:00 Sheet 3	B 06
GLARUS Schwaller			
ZUG Hürlimann	A 11	Fri. / 12:00 Sheet 2	B 07
SPAIN Vez			
ITALY Retornaz	A 12	Fri. / 12:00 Sheet 8	B 08
GERMANY Schulze			

A 17	Fri. / 16:00 Sheet 4	B 13	
A 18	Fri. / 16:00 Sheet 5	B 10	
A 21	Sat. / 07:30 Sheet 6		Winner to QF02 Loser to B 16

Sheetzuteilungen können, wenn notwendig, geändert werden / Sheets may be changed if necessary

Curling Club Bern Inter

WORLD CURLING TOUR

B Road

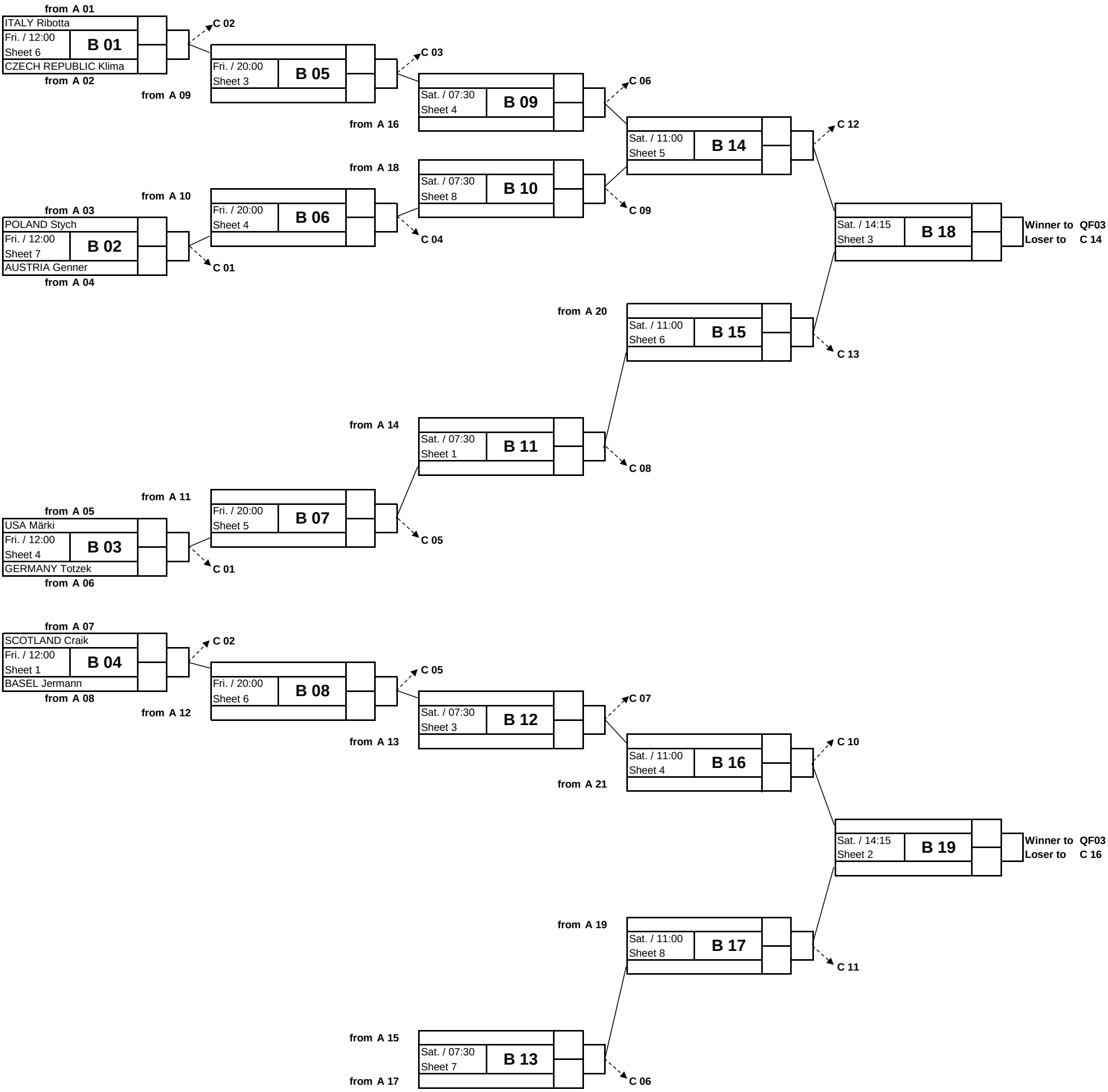

Sheetzuteilungen können, wenn notwendig, geändert werden / Sheets may be changed if necessary

Curling Club Bern Inter

WORLD CURLING TOUR

C Road

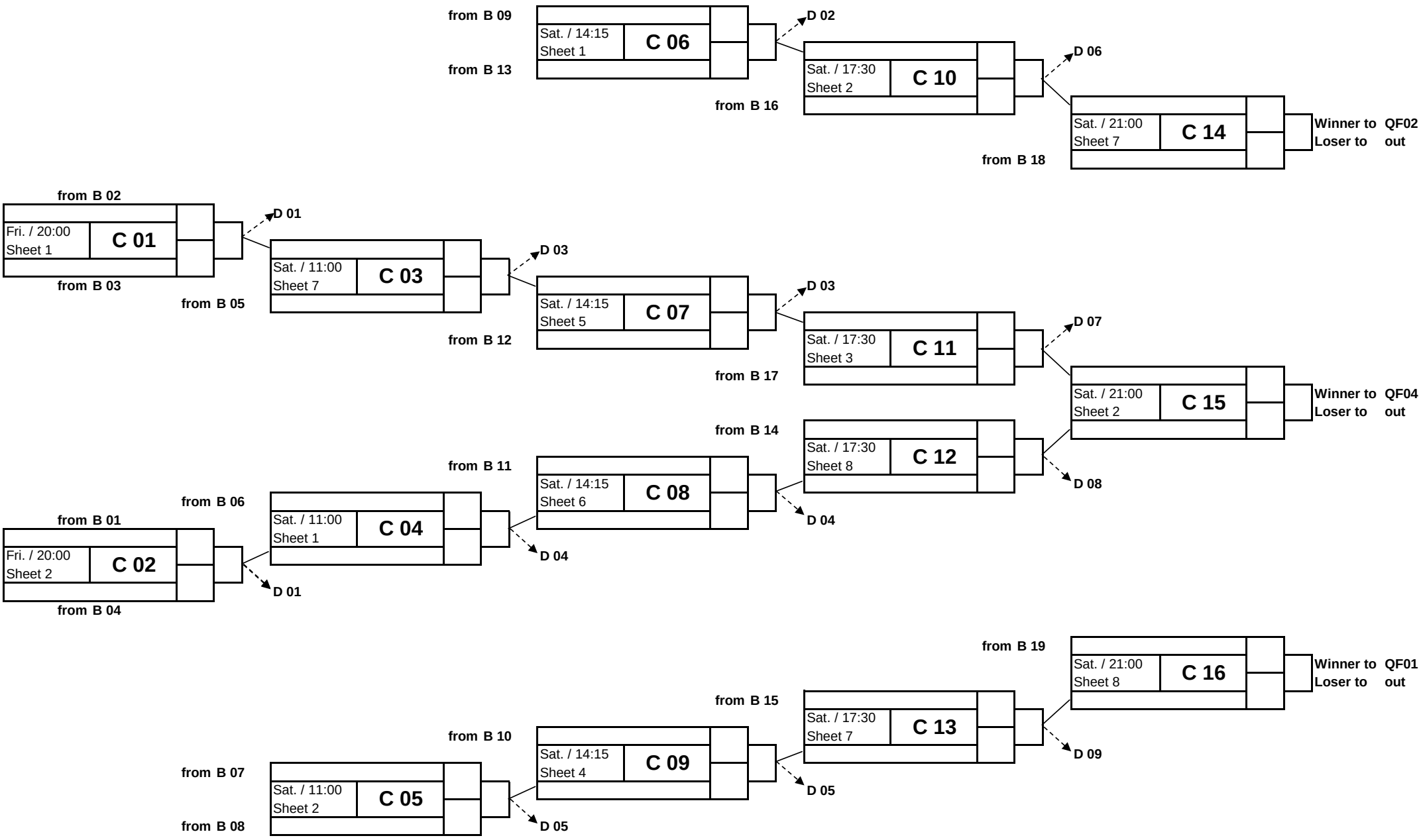

Sheetzuteilungen können, wenn notwendig, geändert werden / Sheets may be changed if necessary

Curling Club Bern Inter

Consolation-

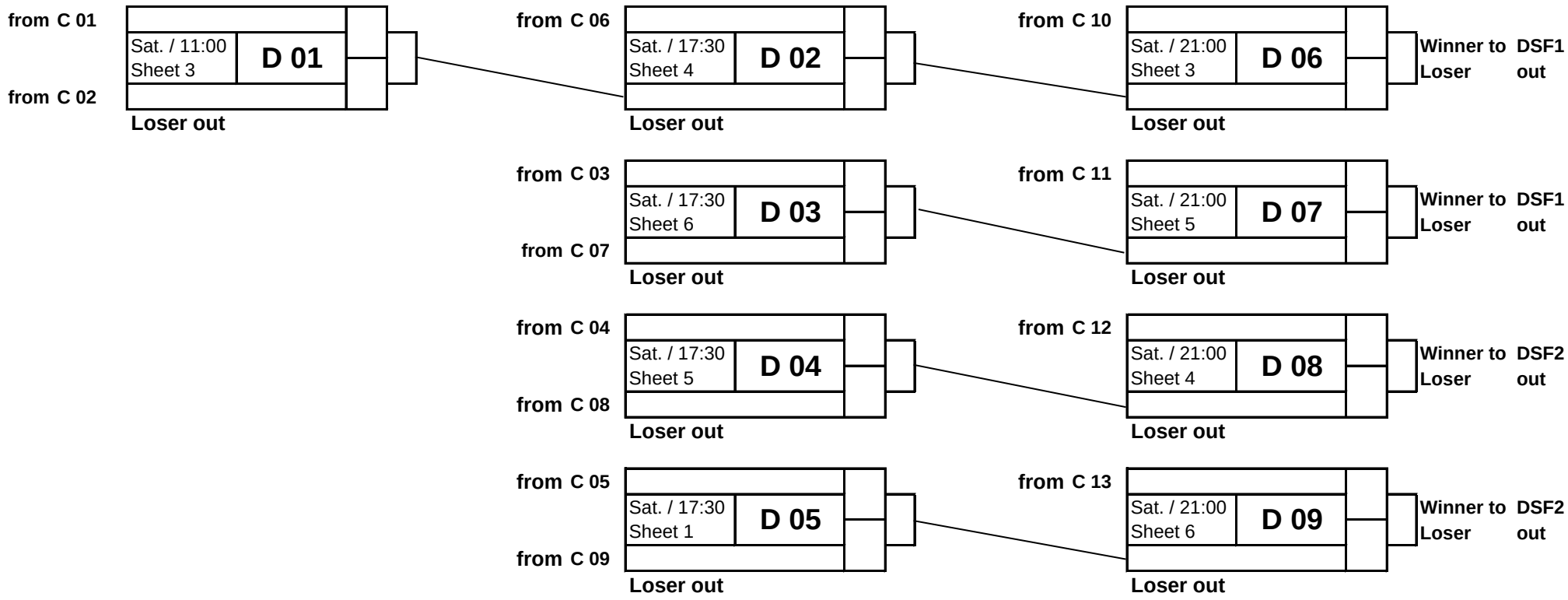

Sheetzuteilungen können, wenn notwendig, geändert werden / Sheets may be changed if necessary